The Opel Association of North America

THE OPEL EXCHANGE

The Official Newsletter of the OANA **Vol.7 No.5 – Sept/Oct 1999**

OK its fast, but maybe not that fast ….

(Mikes V-6 Conversion)

3.1 L GM V6, BORG WARNER T-5, MUSTANG EATING OPEL GT

The goal of this project was to build an Opel GT with around 200 HP but still have a daily driver, well behaved car. Of course other goals included minimal costs and ease of the transplant. My dream GT began probably 10 - 12 years ago after deciding to build a convertible GT and transplanting some super engine into it. Well I did the convertible conversion about 8 years ago but that's a separate topic. This article will address the drivetrain conversion which was recently completed.

I began researching different engine/tranny combos about 3 years ago and like any engineer had to dig into every aspect and do all the research before making the decisions. The engines that I researched and decided would all be good choices included the Ford 2.3L 4 cylinder (done nicely by at least 2 GTs including Doug Grove's 2nd place Carlisle winner), the Olds Quad 4 (also illustrated by Doug Grove's 1st place Carlisle winner), the Mazda rotary engine (done immaculately by Richard Ramos), the GM 2.5L Iron Duke motor, and the various GM 60 degree V6 motors. The latter has been done by a few folks using the carbuerated 2.8L version.

First off the Ford 2.3L motor is a great choice. Widely used in all aspects of 4 cylinder racing from NASCAR, Sprint, and buggies. Lots of aftermarket support and lots of high performance stuff. A streetable tame engine can be built up to about 160 HP but anything past that becomes expensive and high strung. The Iron Duke is cheap and easy to find, but is considered old technology and support is dwindling. The Quad 4 is a powerful 200 HP production motor with twin cams built by Olds but seems to have a reliability problem. It is also a very tall motor and according the Doug Grove was a lot of work to put into the GT. It's also an expensive motor! The Mazda rotary is probably one of the choice motors for many transplants because it can produce loads of power and is a nice small package that fits easily in many cars. However, this motor is expensive, rebuilds are expensive, and aftermarket parts are expensive. The other drawback I encountered was the lack of low end torque. Without the reciprocating mass; remember "there's no substitute for cubic inches"; the rotary doesn't produce it's torque until high in the rpm band. It will however rev very very high!

The GM 60 degree V6 has evolved through at least 5 versions that I know about with the latest version being the 3.4L single cam pushrod type. The first generation 2.8 carb motors were very poor in power and developed a bad reputation however GM redesigned the heads with better flow and bigger valves. The 2.8 HO as it was known was standard in Fieros and Camaro/Firebirds. The 3rd generation of this motor included a stroked crank yielding 3.1L of displacement. Iron head versions were used in RWD vehicles such as the Firebird/Camaros. Aluminum head versions were used in several minivans. A dual overhead cam version was also developed and yielded an impressive 215 HP. This motor has very wide heads and would not fit into the GT engine bay. The last generation of the GM V6 was a punched out 3.1L block yielding 3.4L of displacement. This motor is used in Camaros/Firebirds (iron heads) and minivans (aluminum heads). Note that the aluminum and iron head motors have very little in common due to different valves, pistons, heads, intakes, etc. The 3.4L Camaro V6 is the engine of choice although being a relatively new engine, it was impossible to find when I wanted it. I settled for a 92 Camaro 3.1L V6, T-5 tranny, computer and all wiring harnesses for a $750 deal. This was a deal I couldn't pass up however wouldn't you know it now I occasionally see good deals for 3.4L motors - oh well. One important note however, I had to swap the Camaro T-5 for one out of an S-10 pickup. Exactly the same T-5 but the shifter comes out the top centered which works fine for the GT. The Camaro T-5 has the shifter all the way in back. The flywheel was also changed to match the S-10 as clutch geometry was slightly different.

The 3.1L V6 is rated at about 160 Hp but are very easily built to 200 - 220 HP with minor mods. I joined the Fiero and GM F-body performance mailing list just to learn all there is to know about GM V6 motors. The Fiero folks build all these motors and know all the tricks. With a good exhaust, porting the 3 piece intake manifolds, camshaft, custom programming, and a few other tricks, 200 HP very easy. The other great thing about this engine is the real strong torque band all the way through from idle to floored. And believe me it will burn the tires in 1st, 2nd, and 3rd! What a ride!

The basic conversion included removing the upper portion of the driver's side footwell flush to the steering shaft to clear the exhaust manifold. This isn't even noticeable from inside as all the area is above your right foot anyway. A custom engine crossmember was fabricated to replace the stocker. This mount is located slightly forward of the stocker to mate up with V6 mounts and clear things like oil filter and starter. The Opel automatic tranny crossmember worked perfectly for the T-5 with only a centering hole and spacers required for tranny alignment. The Opel driveshaft was cut and balanced professionally for a minor $40 and the Opel stock radiator rebuilt with triple high flow cores. Custom exhaust, custom ECM programming, and a few other details finished the job.

In conclusion, I believe I succeeded in producing a very streetable high powered Opel GT with very reasonable expenses. The car has all the power I'll ever need and has already laid waste to two of my buddies with 5.0L Mustangs who have been talking smack for the last 6 months. Electronic fuel injection is definitely the way to go: instant starts, instant throttle response, and no more damn hesitations or hickups! Oh did I mention the 0.8 ratio 5th gear sure is sweet. Should yield big improvements in fuel economy and top end speeds. A future article will provide more details surrounding the transplant and electronics.

3.1L GM V6, BORG WARNER T-5, MUSTANG-EATING OPEL GT (PART 2)

Well many of you have hounded me for months to write this second article so here it finally is. I apologize for being so long Mr. Goin but I've got TOO MANY HOBBIES!!!! I should really see a doctor about that. Anyway, to recap the first article, I covered my basic decision process on which engine to choose and how to ultimately transplant the GM 3.1L 60 degree V6 into the Opel GT. This article will cover the basics behind the electronic fuel injection (EFI) and the Electronic Control Module (ECM) and how they are integrated into the GT electrical system.

Since I was new to EFI, I needed to learn quite a bit about all the different sensors involved how they controlled the programming, and how the wiring harness was laid out. The V6 engine I bought used did come with the complete wiring harness as well as the onboard computer. An absolute must unless you really know what you are doing and can fabricate your own. I first went to the local library and obtained the big version of the Chilton's repair manual, which contained very detailed schematics, pin diagrams connector identifications, vacuum schematics, ECM trouble codes, diagnostic procedures, and pretty much everything else I needed to know about the engine. Get the idea – get this book or it's equivalent! I studied this book for about a month, talked with several EFI experts on line, and finally felt like I knew how to proceed.

I first decided that I was going to build a drivetrain which used the basic EFI components but delete most of the emissions equipment such as the EGR system, air recirculation pump, power steering pump, air conditioning, and a few minor bells and whistles often found on new cars. By doing this I could greatly simplify the installation, save room, and reduce the wiring harness extensively. Note that most modern EFI systems use pressure sensors and electronic valves all over the place such as in the AC, power steering, and AIR circuits. I scrapped all that stuff and relished the simplicity and space I gained!

After visually gaining knowledge of the entire wiring harness (easier said than done!), I labeled the connectors and removed the entire harness and ECM from the engine. I then proceeded to remove all the unnecessary wires and connectors and rebuild the harness with the preferred layout that I wanted. I triple checked all the runs, ground leads, and ECM connector pins and then set it all aside until needed. Table 1 shows which signal wires I kept, deleted, and what they do. The ECM was designed to be mounted inside the car using a large bulkhead feed-through. Since I had made my GT into a convertible years ago and not used the heater core since, I decided to remove the entire unit and utilize that compartment for the ECM. This turned out to be a great deal since the cubbyhole left by the heater/fan core was the perfect size for the ECM. I lined the area with carpet scraps and foam padding and tucked the module in safe and secure.

GM V6 Engine System	ECM Connector	Status
TPS	C1.A5,C1.B5,C3.F13	leave as is
MAP	C1.A4,C1.B6,C3.F15	leave as is
Idle air control stepper motor	C3.E3,E4,E5,E6	leave as is
Coolant temp sensor (ECM)	C1.B6, C3.E16	leave as is
Coolant temp sensor (Gage)	NA	replace w/ Opel sending unit
Detonation sensor	C3.F9	leave as is
O2 sensor	C3.E14	leave as is
Fuel injectors	C2.C11,C2.C12	leave as is
Oil pressure sensor		replace w/ Opel sending unit
EGR solenoids	C3.E9,C3.F4,C3.F5	remove
Distributor	C2.C7,C2.C8,C2.D8,C2.D9	leave as is
Ignition coil		connect to Opel wiring
Starter solenoid		connect to Opel wiring
Generator		connect to Opel wiring
Fuel pump/oil pressure switch		connect to Opel sending unit
IAT	C1.B5, C3.F16	leave as is
Electric Coolant fan		leave as is
tranny speed sensor	C1.B9,C1.B10	use T-5 sending unit
Power steering switch		remove
Fan AC pressure switch		remove
Brake pressure switch		remove
Heater blower motor		remove
Heater blower resistors		remove
AC blower resistors		remove
Blower high speed relay		remove
AC compressor clutch		remove
AC compressor control relay		remove
AC high pressure switch		remove
AC pressure cycling switch		remove
A.I.R. select valve		remove
Canister purge valve		remove

TABLE 1: ECM System pinout and function description.

3.1L GM V6, Borg Warner T-5, Mustang-Eating Opel GT (Part 2)

After completing the actual engine transplant and associated structural, body, and drivetrain modifications, it came time to start wiring up the engine. Now I needed to decide how to integrate the EFI wiring into the GT. Going back to the Opel GT wiring schematics I charted out on paper all the connections I had disconnected from the original engine bay (i.e. oil pressure, started, ignition, water temp, etc.). A few major hurdles arouse and have yet to be resolved. The GM motor uses different standards for the gages and these signals are not compatible with the Opel gages. Believe it or not I was able to replace the GM oil pressure sending unit with the Opel one and this solved that critical gage problem. The water temp was also easy to solve by threading in an adapter into the GM head which allowed the Opel temp sending unit to be used. The speedometer and tachometer however posed a big problem. I did manage to recurve the tach to approximate the 6 cylinder rpms but it's not that accurate in all ranges. The final solution would be to add aftermarket electronic gages for these two inputs.

Most of the other critical signals required by the ECM had to be wired up individually into the GT. Signals such as main power, "run" power, fuel pump, etc. I went to a local junkyard and found a small 12 fuse panel which worked great for this task. It was also necessary to add several fused circuits for the ECM. A schematic of the wiring integration is shown in figure 1. As you can see from the diagram, I needed to add 5 new fuses plus utilize the GM in-dash connector to hook up the extra leads.

Figure 1. V6 wiring harness to Opel GT schematic

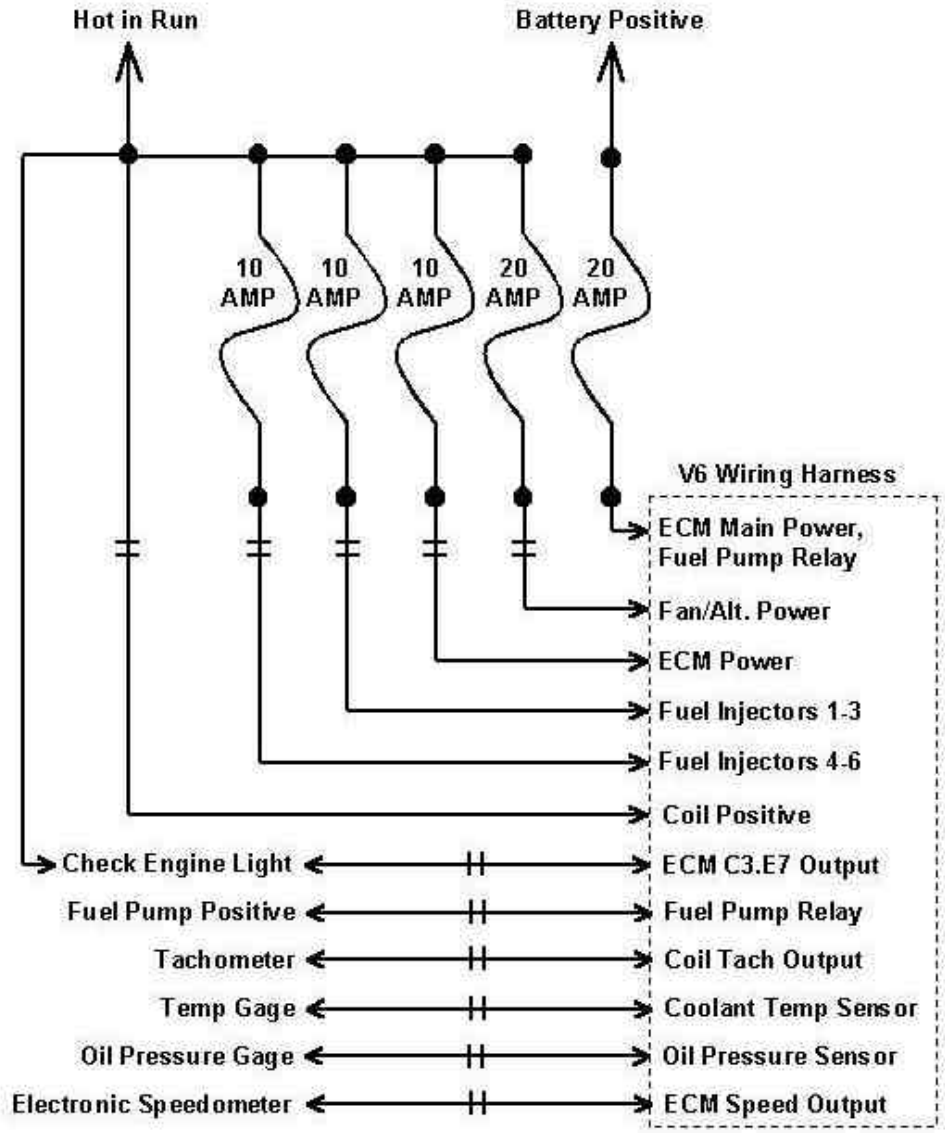

I hope this article helps to illustrate the extra complexity involved with integrating a modern day electronic fuel injection system into the Opel GT. By doing a little research and talking to those who have been there, the project can be manageable and within the grasp of a dedicated Opel enthusiast.

Part three of this article will cover the details of how to physically install the engine and drivetrain.

By Mike Pilkenton

3.1L GM V6, Borg Warner T-5, Mustang-Eating Opel GT (part III) by Mike Pilkenton

Well fellow Opel nuts, again I apologize for being so long on this article but this “work” concept keeps getting in the way of my hobbies. Just 6 more years to go in the Air Force! The first part of this series covered my basic decision process on which engine to choose and an overview of how to ultimately transplant the GM 3.1L 60 degree V6 into the Opel GT. Part two covered the basics behind the electronic fuel injection (EFI) and the Electronic Control Module (ECM) and how they are integrated into the GT electrical system. The last part of the series will cover what most folks have been emailing me about, and that is the specifics to fitting the drivetrain into the GT.

The main areas of concern are the body modifications, engine mount, cooling system, exhaust system, tranny mount, and finally the driveshaft modification. I must admit that the whole project was really easier than I had anticipated considering all the research I had done and the fellow Opel nuts I talked to about other engine transplants. Given the basic skills of body work techniques, welding, and basic metal fabrication, this conversion is definitely worth considering.

I began by using a parts car to trial fit the engine and transmission into the engine bay and determining how much sheet metal to cut off of the upper footwell on the driver’s side. As the picture illustrates, about 4 inches had to be cut off which included the accelerator pedal linkage. I essentially cut the well inward almost flush with the steering shaft, pop riveted in some sheet metal, and finished it off with standard bodywork. The accelerator pedal had to be replaced with a custom made bracket, pedal, and cable lead-off which of course runs through the firewall to the throttle body. This was the ONLY body modifications required as the engine, bellhousing, and transmission all fit in the other areas.

The next big hurdle was determining how to support the engine. I played around with the stock GT engine crossmember but the biggest problem was clearing the side mounted oil filter and longer starter motor that the V6 sported. The stock mount also really would not clear the V6 oil pan which doesn’t have the big rise in the front like the 1.9 Opel engine. And finally, I thought the GT engine crossmember was really ugly so I just built my own. I used 1” x 2” box steal with a medium thickness wall. As seen in the picture it basically mimics the Opel design utilizing a solid lateral member anchored to the frame in three places each side and vertical risers to the engine mounts on the block. Structurally this puts the weight down on the crossmember as Opel intended and prevents pulling the frame members inward or possibly even twisting the boxed frame members. To find the rubber mounts I simply went to the local parts store and started thumbing through the parts book. A good enthusiastic parts guy can be a great help here!

The V6 motor uses mounts that are slightly forward of where the Opel engine mounts are so the new crossmember had to be mounted to the underside of the frame as shown. Feed-through bolts from inside the frame work great here. Strength and good welds are of course a top priority! As a side note I mounted the engine as far aft as possible to keep the weight of the car balanced. The front pulley actually sits further back than the Opel pulley, which allowed me to use the stock GT radiator location. A good radiator shop can re-core the stock radiator with a 3-core high flow element. So far this has worked ok even out here in the desert!

Even though I used a 91 Camaro engine, I had to use the S-10 T-5 and matching bellhousing to accommodate the GT shifter location. This worked out great as the Opel automatic transmission mount was a perfect fit for the T-5! Only a center hole drilled in the member and proper spacers were required to align everything up. The S-10 clutch yoke was even used virtually as is to mate up with the Opel clutch cable. And in case you haven’t paid attention to the S-10 clutch articles, the spline dimensions are exactly the same as the Opel! So getting a stock GT driveshaft shortened to the proper length and rebalanced is all that is needed to finish the job.

Finally I needed to tackle the exhaust system. I had determined that using Pontiac Fiero manifolds was the way to go as these are very tight to the block and run to the ends of the heads. Being a V6 with heads the same, the manifolds can be easily swapped from one side to the other depending on which way you want to exit. The bellhousing, although it fit ok, left no room for exhaust pipes to exit rearward. So as with most big engine transplants, going forward and then down was the solution. The Fiero manifolds all have inherent flaws in the weld seams so get these redone and port the insides of the joints. All the Fiero guys do this for added performance. A good custom muffler shop can take care of the rest. I had the pipes exit downward from the front and run backward, crossing behind the transmission to a single muffler and then over the rear axle splitting into dual pipes.

Well that does it for now. There are many small details which I did not have room to cover so please keep in mind that any drivetrain transplant is still a lot of work. As mentioned time and time again on the email list, don't try these projects unless you know EXACTLY what you are getting into. Do lots of research ahead of time (I did 3 years worth), and make a complete plan before chopping up your baby! Given a sincere motivation to succeed and the skills to do custom crafting, you can have as much fun as I did. One final note, study the Tom Swift books for inspiration! Now there's a test of your literature knowledge.